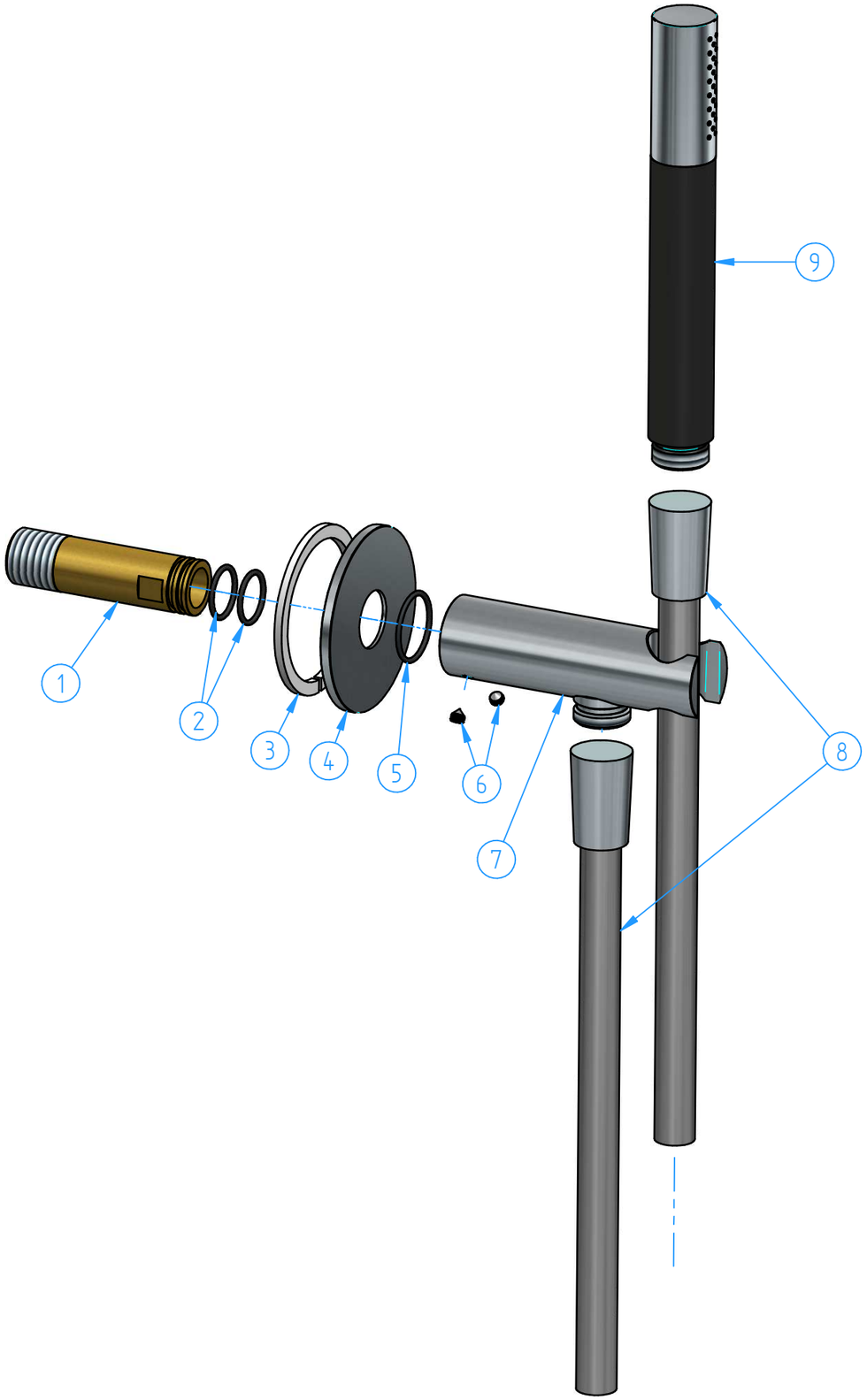

ID Number	Code	Description	Pcs
9	M352-00	Handshower	1
8	M015-00	Flexible hose	1
7	CB7501-001	Wall coupling with hand shower bracket	1
6	CB7501-04	Dowel M5x5	2
5	CB7501-05	O.ring 23.52x1.78	1
4	CB7501-01	Wall flange	1
3	CB7501-07	Whasher for flange	1
2	CB7501-06	O.ring 17.17x1.78	2
1	CB7501-03	G1/2" Threaded stem	1

N°	REVIEW	Date

Sheet **1 of 1**

Scale 1:2

Material

Weight 0 kg

Description

Wall coupling with hand shower bracket

Code	Date of issue	Chamfers not quoted	Finishing
CB7501-00	30/03/2020	0.5x45°	SM Grinding / LU Polishing / CR GN

hotbath
italian bathroomware

This drawing is property reserved of Hotbath Srl.
Without express authorization, the copying, distribution and utilization of this document as well as the communication to others is prohibited