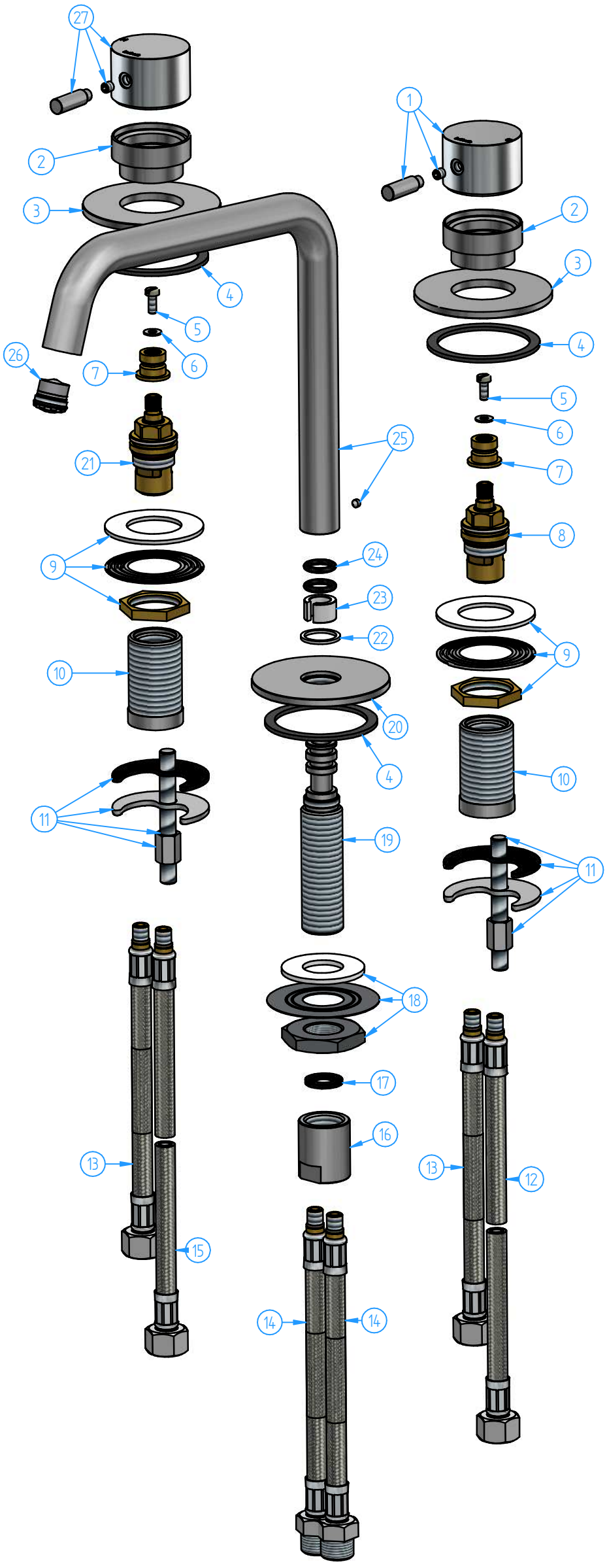

ID Number	Code	Description	Pcs
27	AR033-002	Hot handle	1
26	CB003-002	Aerator M16,5x1 with flow regulator 1,5 gpm	1
25	AR023-001	Spout	1
24	FKM13-04	O-Ring 10,77x2,62	2
23	AR023-06	Anti-friction insert	1
22	AR023-07	Anti-friction ring	1
21	CB031-003	1/2" Ceramics headwork 90° SX	1
20	AR023-04	Flange for spout	1
19	AR023-05	Connection for spout	1
18	AR001-002	Fixing kit	1
17	M100-10	Rubber washer	1
16	AR033-05	Connection spout-flexible	1
15	FKM11-007	G3/8" Flexible pipe HOT	1
14	AR033-007	G3/8" Male glexible pipe MIXED WATER	2
13	AR033-006	G3/8" Flexible pipe MIXED WATER	2
12	FKM11-006	G3/8" Flexible pipe COLD	1
11	AR004-005	Additional fixing kit for increased thicknesses	2
10	AR033-01	Tap body	2
9	AR033-003	Fixing kit	2
8	CW033-005	1/2" Ceramics headwork 90° DX	1
7	AR077-13	Diverter insert	2
6	CB005-11	Washer 4x12 UNI 6953	2
5	CB029-06	Screw M4x10 UNI 6957	2
4	AR031-09	Gasket	3
3	AR033-06	Flange for tap	2
2	AR033-03	Headwork cover	2
1	AR033-001	Cold handle	1

N°	REVIEW	Date

Sheet **1 of 3**

Scale 1:2.5

Description

3-hole washbasin mixer

Material

Weight 0 kg

Code	Date of issue	Chamfers not quoted	Finishing
AR033-00	22/07/2022	0.5x45°	SM Grinding / LU Polishing / CR GN

hotbath italian bathroomware

This drawing is property reserved of Hotbath Srl.
Without express authorization, the copying, distribution and utilization of this document as well as the communication to others is prohibited